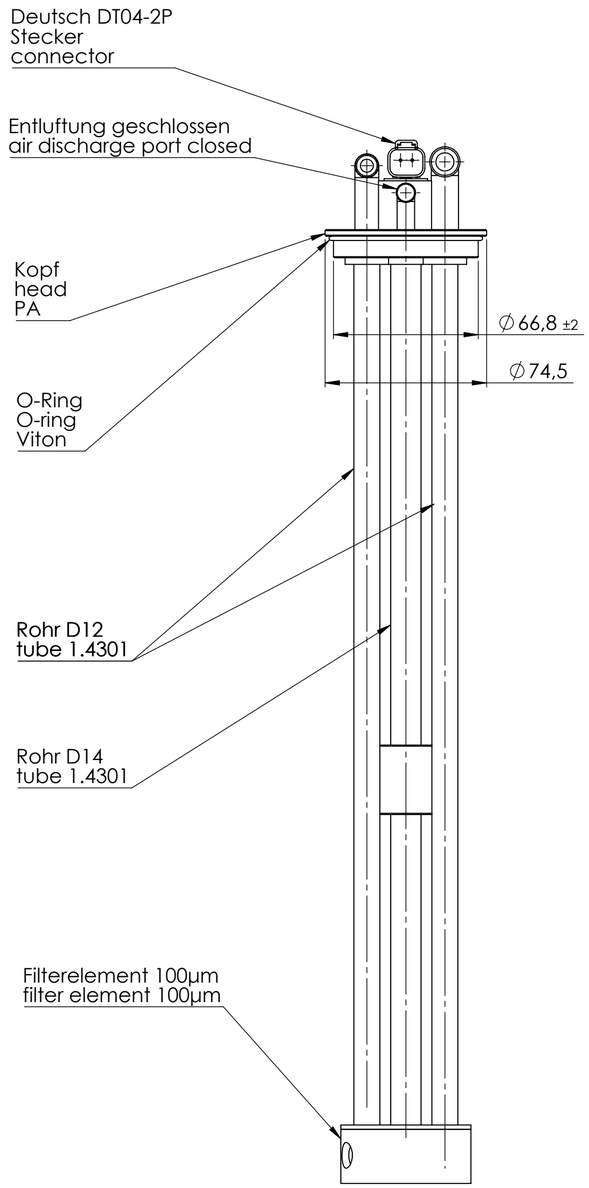

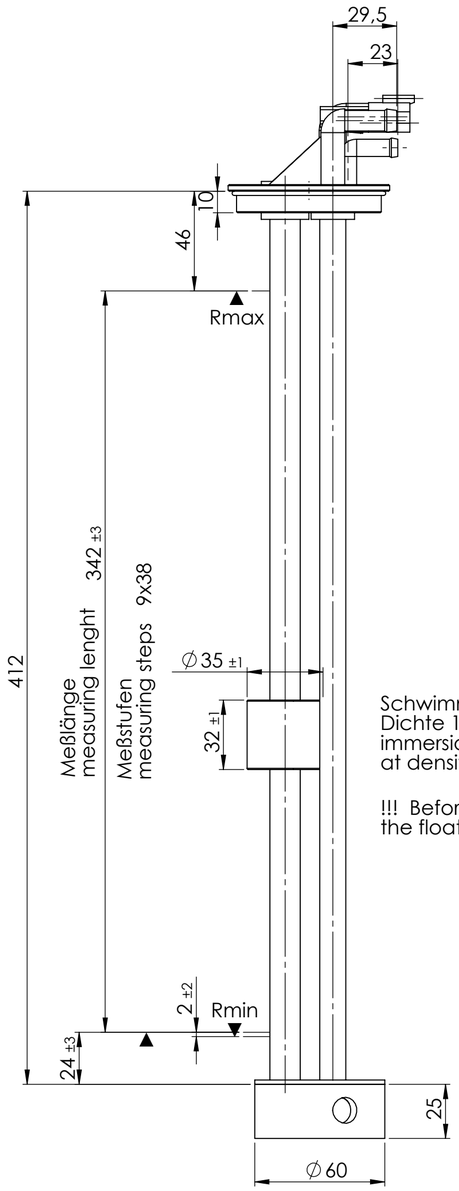

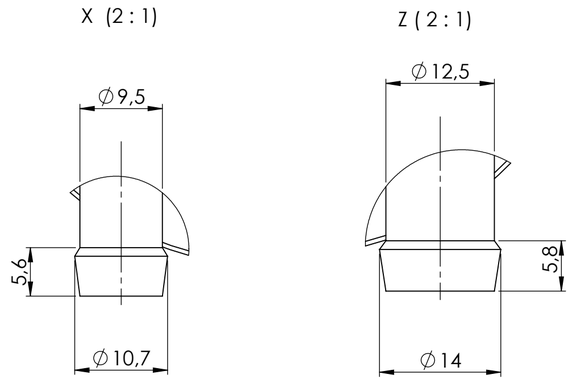

Schwimmereintauchtiefe bei Dichte 1 ca. 16 mm
immersion depth of the float at density 1 about 16 mm

!!! Before the mounting, slide the float UP and DOWN

Schalt stufen	Wiederstand	Gesamt wiederstand	Abstand von Dichtfläche
switching steps	single resistance	total resistance	distance from face
10	16,9	179	46
9	16,9	162,1	84
8	16,9	145,2	122
7	16,9	128,3	160
6	16,9	111,4	198
5	16,9	94,5	236
4	16,9	77,6	274
3	16,9	60,7	312
2	16,9	43,8	350
1	16,9	26,9	388
0	10	10	390

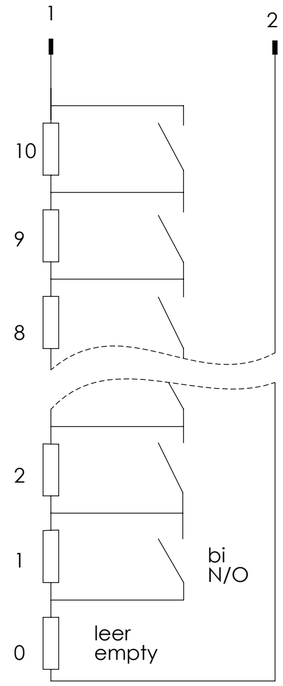

Grundwiederstand
basic resistance
10 Ohm

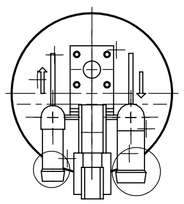

TECHNISCHE DATEN / TECHNICAL SPECIFICATION

Nennspannung	max. 24 V DC	nominal voltage
Meßstrom	240 mA	measuring circuit
Schaltstufen	10	switching steps
Kontaktart	A/B - NO/NC bitabil	contact form
Gesamtwiederstand	179 Ohm	overall resistance
Gundwiederstand	10 Ohm	basic resistance
Schutzart	IP 67 DIN EN 60529	protection class
Betriebstemperatur	-40°C...+85°C	operating temperature

▲ Niveau steigend / rising level
▼ Niveau fallend / falling level

UNLESS OTHERWISE SPECIFIED:
DIMENSIONS ARE IN MILLIMETERS
SURFACE FINISH:
TOLERANCES:
LINEAR:
ANGULAR:

FINISH:

DEBURR AND BREAK SHARP EDGES

COMECO

REVISION

	NAME	SIGNATURE	DATE
DRAWN			
CHK'D			
APPV'D			
MFG			
Q.A			

MATERIAL:

WEIGHT:

TITLE:
NIG-Entnahmeeinheit
Suction pipe switch

DWG NO.
LC-EX.240709.02

A2

SCALE:1:5

SHEET 1 OF 1